BesFoc

Changzhou BesFoc Motor Co., Ltd

New 2023



INTELLIGENT DC SERVO MOTOR

HIGH TORQUE STEPPER MOTOR AND BLDC MOTOR

SMALL SIZE

HIGH EFFICIENCY

INTEGRATED INTEGRATION

CANopen EtherCAT. Modbus



CHANGZHOU JKONGMOTOR CO.,LTD
Changzhou Jingkong Motor Electrical Appliances Co., Ltd

mobile phone: 15995098661 (WeChat account)
phone: 0519-88372558
mailbox: sales@jkongmotor.com
website: www.jkongmotor.com
address: Building A2, Hutang Science and Technology Industrial Park, Wujin District, Changzhou City



Integrated Motors and Linear Montions Manufacturer

CONTENTS

Company Profile 01

Product Model Description 02

Characteristics of DC servo integrated machine 03

42mm Square integrated dc servo motor 04

57mm Square integrated dc servo motor 05

60mm Square integrated dc servo motor 06

80mm Square integrated dc servo motor 07

integrated stepper servo motor 08

42mm integrated stepper servo motor 09

57mm integrated stepper servo motor 10

Other products 11

Application Scenarios/Cooperative Customers 12

Company Profile

Changzhou BesFoc motor Co., Ltd., founded in 2011, is a high-tech manufacturer specializing in the production of stepper motors and brushless motors. Currently, it has more than 100 employees and 12 research and development personnel; The factory covers an area of 7000 square meters, and the company is equipped with 5 automatic assembly lines, with an annual production of 2 million motors. And have the ability to design and develop motor drivers, as well as provide industry customized solutions

Our motors have been exported to more than 30 countries, including the United States, Germany, Russia, Türkiye, Brazil, etc. The company's products have been widely used in textile, packaging, laser, engraving, printing, advertising, clothing, stone, ceramics, medical, robot, AGV, automatic doors and windows and other fields.

The company has passed ISO9001 quality management system certification, ISO14001 environmental management system certification, and various products have RoSH environmental certification. The product is optimized from three stages: design, process, and process control, strictly controlling product quality, and continuously advancing towards the goal of "zero defects".

BesFoc focuses on the product itself and has created a professional, stable, and experienced technology research and development team by introducing and absorbing advanced foreign technologiesWe invest heavily in establishing our own laboratory for product design and requirements, ensuring fast and efficient solutions for our customers.

Corporate Vision

Becoming a leading brand in the motor industry

Corporate Guidelines

Creating value for customers and providing certain benefits for employees Seeking development for enterprises and contributing to society

Philosophy

Focusing on quality and customer-centric approach











Product Naming Rules

CANopen EtherCAT Modbus BesFoc

Model naming rules for Low Voltage integrated dc servo motor

JK	IDS	42	-	P	01	A
1	2	3		4	5	6

1. Company name abbreviation
2. Product series model, indicating that the motor is an IDS series, referring to the acronym for integrated DC servo
3. Frame number (42/57/60/80), expressed in millimeters by the dimensions of the motor casing and mounting plate
4. Control method optional (P/R/C) P represents pulse, R represents RS485, and C represents CANopen bus
5. The motor model, such as (01/02/03/04/05/06), represents the model of the motor
6. Encoder type: A represents a 17 bit single turn absolute encoder

Model naming rules for Integrated stepper servo motor

JK	ISS	42	-	P	01	A
1	2	3		4	5	6

1. Company name abbreviation
2. Product series model, indicating that the motor is an ISS series, referring to the first letter number of the integrated stepper servo
3. The frame number (42/57) refers to the side length dimension of the motor end cover
4. Control method optional (P/R/C) P represents pulse, R represents RS485, and C represents CANopen bus
5. The motor model, such as (01/02/03/04/05/06), represents the model of the motor
6. Encoder type: A represents 1000 lines, B represents 2500 lines, and C represents a 17 bit single turn absolute encoder

Our Advantages

CANopen EtherCAT Modbus BesFoc

Characteristics of integrated low voltage DC servo motor

compact

Integrated design of integrated drive motor Easy installation, small footprint, and simple wiring

Multiple motion control modes

Supports the CiA402 standard protocol, including Relative position mode, absolute position mode, speed Mode, torque mode, and origin regression mode

low-power consumption

Adopting low internal resistance MOS to ensure motor performance Excellent torque utilization while reducing motor power consumption And heat generation, effectively extending the service life of the motor

control mode

Supports pulse/RS485/CANopen

Multi segment position speed function

With multi segment position function and multi segment speed function

Safe and reliable

Driver built-in in place and alarm output signal Convenient for upper computer detection and control built-in Multiple alarm functions such as over differential, over undervoltage, and over temperature Can ensure the safe operation of processing equipment

Integrated solution for precision control motors



Integrated motion controller | DC servo integrated machine | DC servo integrated machine | DC servo integrated machine | DC servo integrated machine

Traditional split solution



PLC/motion controller | Ordinary servo motor | Ordinary servo motor | Ordinary servo motor | Ordinary servo motor

New Arrivals CANopen EtherCAT Modbus BesFoc

42mm Square integrated dc servo motor

Features :

- Adopting a new 32-bit M4+core with 120M or 240M main frequency
- Stable torque characteristics from low to high speeds, with high speed and precision
- Equipped with brake resistor interface to prevent damage to the electromechanical braking system
- Wide speed range, low temperature rise, and high efficiency
- Integrated motor and drive, compact size, simple wiring, and drive Good compatibility with the motor
- Equipped with overcurrent, overvoltage, over temperature, and over differential protection functions
- Configure a 17 bit single turn absolute encoder





Communication method:

- impulsive
- RS485 MOdbus RTU network type
- CANopen network type

Protection level:

- Waterproof type: IP30, IP54, IP65, optional

Usage:

- Medical equipment, logistics transportation, industrial automation, textile machinery, laser, drawing, traditional Chinese medicine ingredient industry, etc

Product Selection

Model	Power (W)	Rated Voltage (VDC)	Rated Current (A)	Rated Speed (rpm)	Rated Torque (N.m)	Total height L (mm)	Encoder	Control method (optional)		
JKIDS42-P01A	26	24	1.8	4000	0.0625	61	17bit	Pulse	RS485	CANopen
JKIDS42-P02A	53	24	3.3	4000	0.125	81	17bit	Pulse	RS485	CANopen
JKIDS42-P03A	78	24	4.5	4000	0.185	101	17bit	Pulse	RS485	CANopen
JKIDS42-P04A	78	24	4.5	3000	0.25	120	17bit	Pulse	RS485	CANopen

This is a representative product, and both the output shaft and parameters can be customized. For detailed information, please Email: sales@jkongmotor.com

Product Outline Drawing

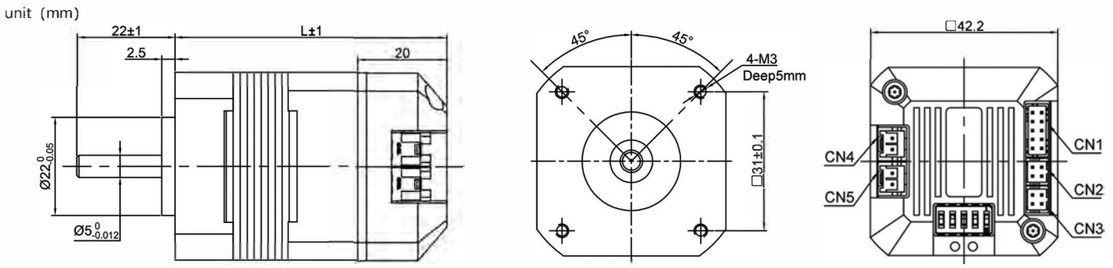

New Arrivals CANopen EtherCAT Modbus BesFoc

57mm Square integrated dc servo motor

Features :

- Adopting a new 32-bit M4+core with 120M or 240M main frequency
- Stable torque characteristics from low to high speeds, with high speed and precision
- Equipped with brake resistor interface to prevent damage to the electromechanical braking system
- Wide speed range, low temperature rise, and high efficiency
- Integrated motor and drive, compact size, simple wiring, and drive Good compatibility with the motor
- Equipped with overcurrent, overvoltage, over temperature, and over differential protection functions
- Configure a 17 bit single turn absolute encoder





Communication method:

- impulsive
- RS485 MOdbus RTU network type
- CANopen network type

Protection level:

- Waterproof type: IP30, IP54, IP65, optional

Usage:

- Medical equipment, logistics transportation, industrial automation, textile machinery, laser, drawing, traditional Chinese medicine ingredient industry, etc

Product Selection

Model	Power (W)	Rated Voltage (VDC)	Rated Current (A)	Rated Speed (rpm)	Rated Torque (N.m)	Total height L (mm)	Encoder	Control method (optional)		
JKIDS57-P01A	26	24/36	3.5	3000	0.29	101	17bit	pulse	RS485	CANopen
JKIDS57-P02A	53	24/36	5.4	3000	0.45	121	17bit	pulse	RS485	CANopen
JKIDS57-P03A	78	36/48	7.5	3000	0.64	141	17bit	pulse	RS485	CANopen

This is a representative product, and both the output shaft and parameters can be customized. For detailed information, please Email: sales@jkongmotor.com

Product Outline Drawing

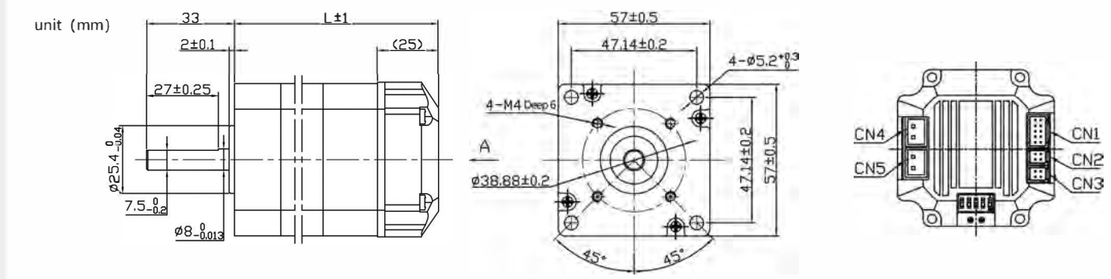

New Arrivals CANopen EtherCAT Modbus BesFoc

60mm Square integrated dc servo motor200/400W



Features :

- Adopting a new 32-bit M4+core with 120M or 240M main frequency
- Stable torque characteristics from low to high speeds, with high speed and precision
- Equipped with brake resistor interface to prevent damage to the electromechanical braking system
- Wide speed range, low temperature rise, and high efficiency
- Integrated motor and drive, compact size, simple wiring, and drive Good compatibility with the motor
- Equipped with overcurrent, overvoltage, over temperature, and over differential protection functions
- Configure a 17 bit single turn absolute encoder



Communication method:

- impulsive
- RS485 MOdbus RTU network type
- CANopen network type

Protection level:

- Waterproof type: IP30, IP54, IP65, optional

Usage:

- Medical equipment, logistics transportation, industrial automation, textile machinery, laser, drawing, traditional Chinese medicine ingredient industry, etc

Product Selection

Model	Power (W)	Rated Voltage (VDC)	Rated Current (A)	Rated Speed (rpm)	Rated Torque (N.m)	Total height L (mm)	Encoder	Control method (optional)		
JKIDS60-P01A	200	24	12	3000	0.64	94	17bit	pulse	RS485	CANopen
JKIDS60-P02A	400	48	11	3000	1.27	112	17bit	pulse	RS485	CANopen

This is a representative product, and both the output shaft and parameters can be customized. For detailed information, please Email: sales@jkongmotor.com

Product Outline Drawing

unit (mm)

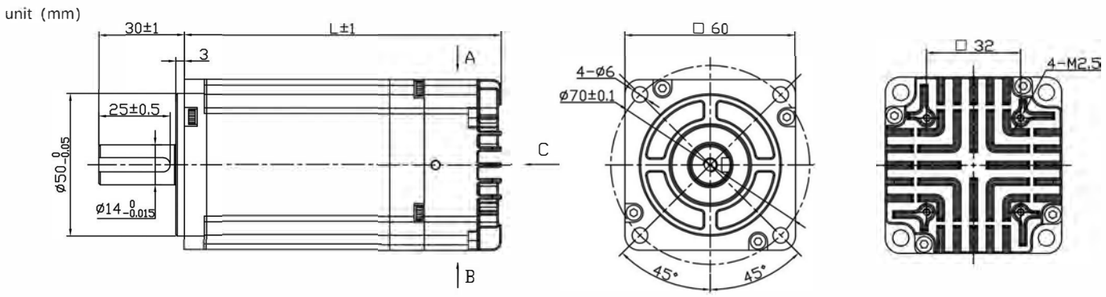

New Arrivals CANopen EtherCAT Modbus BesFoc

80mm Square integrated dc servo motor750/1000W



Features :

- Adopting a new 32-bit M4+core with 120M or 240M main frequency
- Stable torque characteristics from low to high speeds, with high speed and precision
- Equipped with brake resistor interface to prevent damage to the electromechanical braking system
- Wide speed range, low temperature rise, and high efficiency
- Integrated motor and drive, compact size, simple wiring, and drive Good compatibility with the motor
- Equipped with overcurrent, overvoltage, over temperature, and over differential protection functions
- Configure a 17 bit single turn absolute encoder



Communication method:

- impulsive
- RS485 MOdbus RTU network type
- CANopen network type

Protection level:

- Waterproof type: IP30, IP54, IP65, optional

Usage:

- Medical equipment, logistics transportation, industrial automation, textile machinery, laser, drawing, traditional Chinese medicine ingredient industry, etc

Product Selection

Model	Power (W)	Rated Voltage (VDC)	Rated Current (A)	Rated Speed (rpm)	Rated Torque (N.m)	Total height L (mm)	Encoder	Control method (optional)		
JKIDS80-P01A	750	48/72	19/12	3000	2.4	155	17bit	pulse	RS485	CANopen
JKIDS80-P02A	1000	72	17	3000	3.2	175	17bit	pulse	RS485	CANopen

This is a representative product, and both the output shaft and parameters can be customized. For detailed information, please Email: sales@jkongmotor.com

Product Outline Drawing

unit (mm)

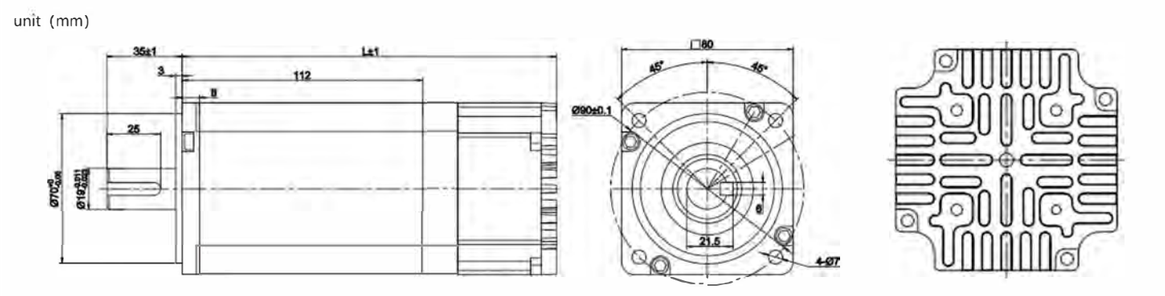

Our Advantages

CANopen EtherCAT Modbus BesFoc

Integrated stepper closed-loop servo Motor characteristics

compact

Integrated design of integrated drive motor Easy installation, small footprint, and simple wiring

Multiple motion control modes

Supports the CiA402 standard protocol, including Relative position mode, absolute position mode Speed mode and origin regression mode

low-power consumption

Adopting low internal resistance MOS to ensure motor performance Excellent torque utilization while reducing motor power consumption And heat generation, effectively extending the service life of the motor

control mode

Supports pulse/RS485/CANopen

Intelligent adjustment of current

Intelligent adjustment of current to reduce Vibration, noise, and heat generation

Safe and reliable

Driver built-in in place and alarm output signal Convenient for upper computer detection and control built-in Multiple alarm functions such as over differential, over undervoltage, and over temperature Can ensure the safe operation of processing equipment

Integrated servo motor andSplit motor comparison

Motor+driver+encoder in one

Split set

Complex wiring increases labor costs



One piece set

Easy wiring and integrated integrated finished product



New Arrivals

CANopen EtherCAT Modbus BesFoc

42mm integrated stepper servo motor

Features :

- Cortex-M4 core high-performance 32-bit microcontroller
- The highest pulse response frequency can reach 200KHz
- Built in protection function, effectively ensuring the safe use of the device
- Intelligent current regulation to reduce vibration, noise, and heat generation
- Adopting low internal resistance MOS, the heating is reduced by 30% compared to ordinary products
- Voltage range: DC12V~36V
- Integrated design with integrated drive motor, easy installation, small footprint, and simple wiring
- Equipped with anti reverse connection function



Communication method:

- Pulse type
- RS485 MOdbus RTU network type
- CANopen network type

Protection level:

- Waterproof type: IP30, IP54, IP65, optional

Usage:

- Medical equipment, logistics transportation, industrial automation, textile machinery, laser, drawing, traditional Chinese medicine ingredient industry, etc



Product Selection

Model	step Angle (1.8°)	phase Current (A)	Rated Resistance (Ω)	Rated Torque (N.m)	Total body height L (mm)	Encoder	Control method (optional)		
JKISS42-P01A	1.8	1.3	2.1	0.22	54	1000ppr/17bit	pulse	RS485	CANopen
JKISS42-P02A	1.8	1.68	1.65	0.42	60	1000ppr/17bit	pulse	RS485	CANopen
JKISS42-P03A	1.8	1.68	1.65	0.55	68	1000ppr/17bit	pulse	RS485	CANopen
JKISS42-P04A	1.8	1.7	3	0.8	80	1000ppr/17bit	pulse	RS485	CANopen

This is a representative product, and both the output shaft and parameters can be customized. For more information, please Email:sales@jkongmotor.com

Product Outline Drawing

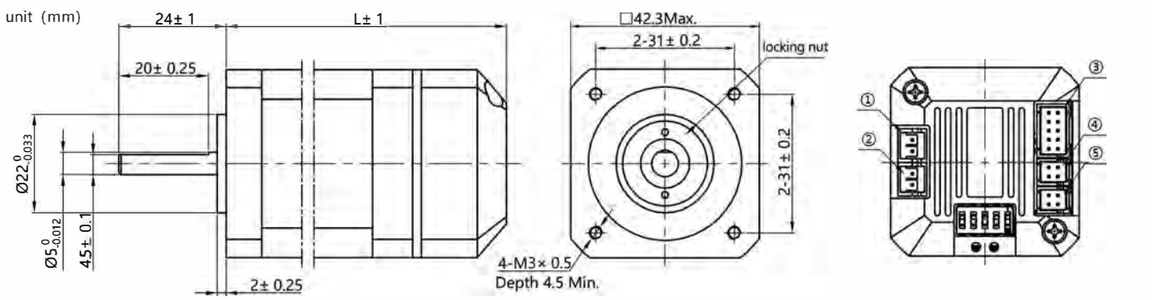

New Arrivals

CANopen EtherCAT Modbus BesFoc

57mm integrated stepper servo motor

Features :

- Cortex-M4 core high-performance 32-bit microcontroller
- The highest pulse response frequency can reach 200KHz
- Built in protection function, effectively ensuring the safe use of the device
- ntelligent current regulation to reduce vibration, noise, and heat generation
- Adopting low internal resistance MOS, the heating is reduced by 30% compared to ordinary products
- Voltage range: DC12V~36V
- Integrated design with integrated drive motor, easy installation, small footprint, and simple wiring
- Equipped with anti reverse connection function





Communication method:

- Pulse type
- RS485 MOdbus RTU network type
- CANopen network type

Protection level:

- Waterproof type: IP30, IP54, IP65, optional

Usage:

- Medical equipment, logistics transportation, industrial automation, textile machinery, laser, drawing, traditional Chinese medicine ingredient industry, etc

Product Selection

Model	step Angle (1.8°)	phase Current (A)	Rated Resistance (Ω)	Rated Torque (N.m)	Total body height L (mm)	Encoder	Control method (optional)		
JKISS57-P01A	1.8	2	1.4	0.55	65	1000ppr/17bit	pulse	RS485	CANopen
JKISS57-P02A	1.8	2.8	0.9	1.2	80	1000ppr/17bit	pulse	RS485	CANopen
JKISS57-P03A	1.8	2.8	1.1	1.89	100	1000ppr/17bit	pulse	RS485	CANopen
JKISS57-P04A	1.8	3	1.2	2.2	106	1000ppr/17bit	pulse	RS485	CANopen
JKISS57-P05A	1.8	4.2	0.75	2.8	124	1000ppr/17bit	pulse	RS485	CANopen
JKISS57-P06A	1.8	4.2	0.9	3	136	1000ppr/17bit	pulse	RS485	CANopen

This is a representative product, and both the output shaft and parameters can be customized. For more information, please Email:sales@jkongmotor.com

Product Outline Drawing

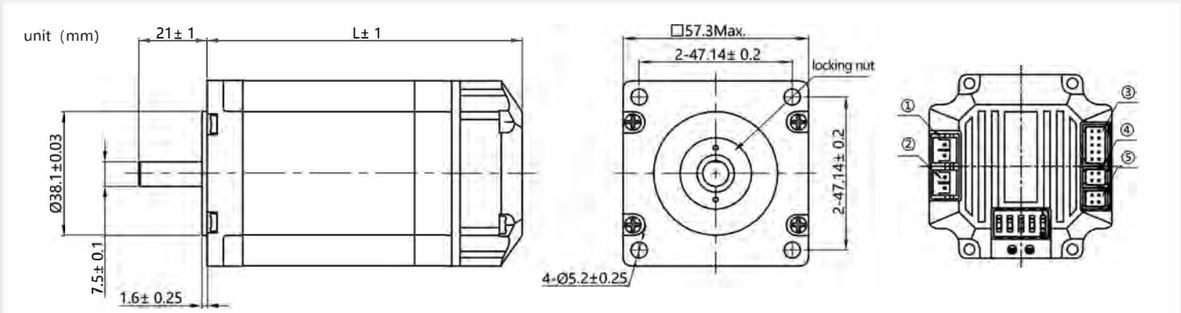

Other products

BesFoc



Stepper motor IP67 type



Stepper motor with brake



Stepper motor with gearbox



linear actuator motor



Brushless motor spindle type



Brushless motor encoder type



Waterproof motor



Closed loop servo type



Hollow shaft kit



outer rotor motor



Built-in fan motor



stepper motor worm gearbox



bldc motor



integrated dc servo motor with gearbox



integrated dc servo motor with brake



integrated dc servo motor with brake and gearbox



Stepper motor



lead screw stepper motor with encoder

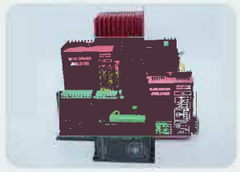

DC brushless driver



stepping motor driver

Application industry/partner customers

BesFoc



medical equipment



automation



new energy



Packaging printing



Logistics transportation



robot



Vending machine



Textile machinery



Precision machine tool

BECKMAN COULTER · Panasonic · SCANFIL · 先临三维

CREATED 创想 · 清华大学 Tsinghua University · MiSUMi · Honeywell

IBM · ROCGENE 鲲鹏基因 · EPSON EXCEED YOUR VISION · 经纬科技 JINGWEI CAD/CAM

NOTE: